WALL FIXING

The Modular Guardrail with **End Wall Fixing (FPT)**.

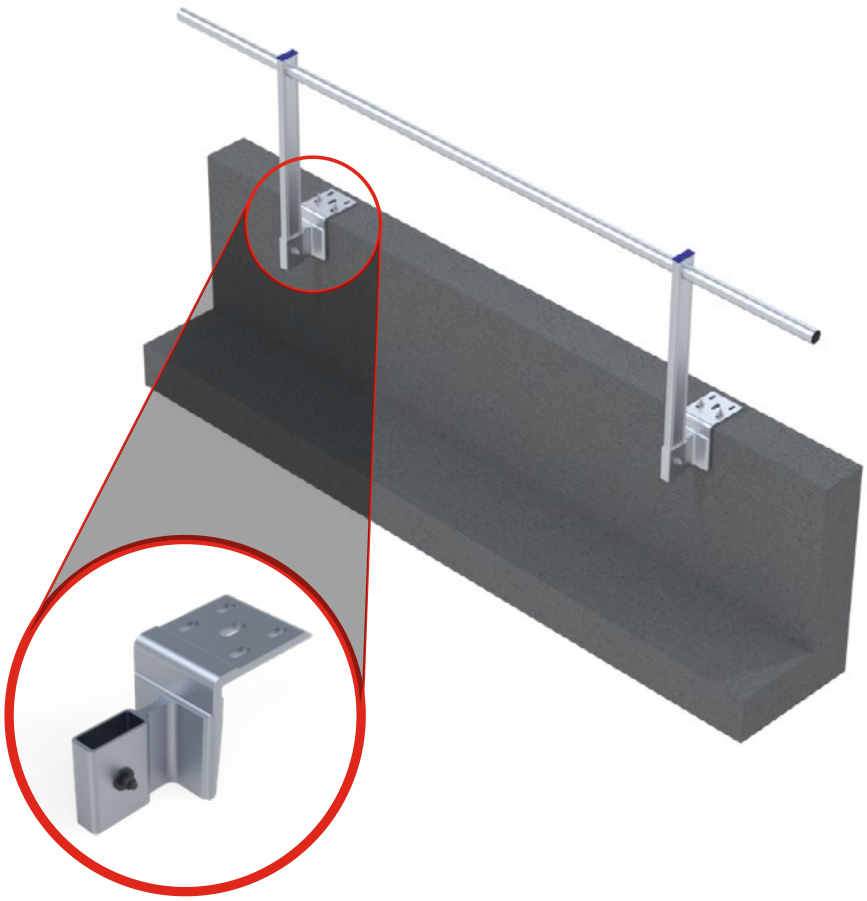

FPT, no toeboard

REF 100304

