WALL FIXING

The Modular Guardrail with **Wall Fixing, without offset (FP)** can be installed **with** or **without toeboard**, as chosen by the customer .

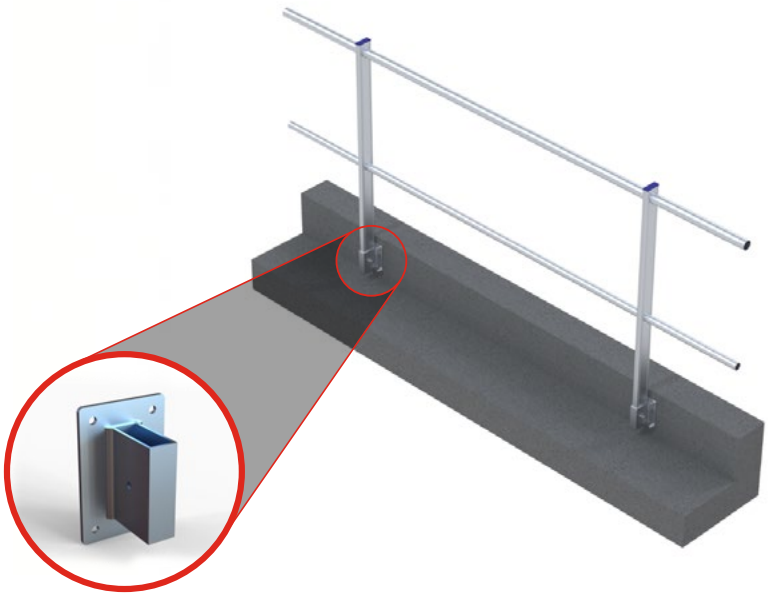

FP, no toeboard

REF 100307

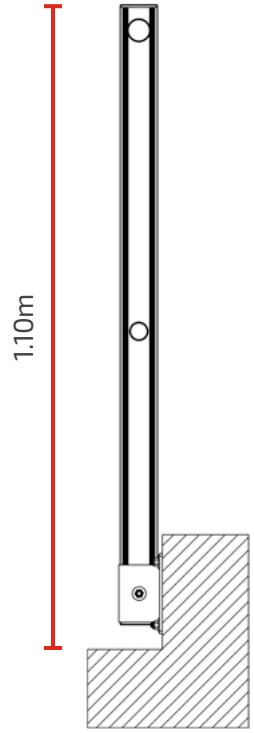

The Modular Guardrail with **Wall Fixing, with offset (FPE)** can be installed **with** or **without toeboard**, as chosen by the customer .

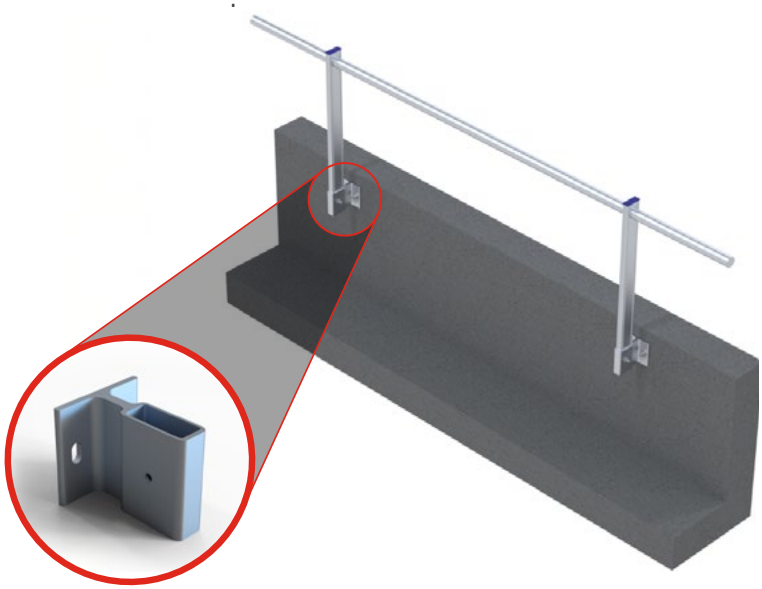

FPE, no toeboard

REF 100303

